Work Order ID 71368

Thursday, June 30, 2011 8:17:31 AM

Item ID: D350-604-041 **Accept** **Setup Start** **Stop**

Revision ID:

Item Name: Rear Locker Extender

Start Date: 6/30/2011 **Start Qty:** 1.00 **Cust Item ID:**

Required Date: 7/29/2011 **Req'd Qty:** 1.00 **Customer:**

Reference:

Approvals: **Process Plan:** CL **Date:** 11/06/30 **Tooling:** _____ **Date:** _____ **Run Start** **Stop**

QC: _____ **Date:** _____ **SPC (Y/N):** _____ **Date:** _____

Sequence ID/ Work Center ID	Operation Description	Set Up/ Run Hours	Tool ID	Tool #	Plan Code	Accept Qty	Reject Qty	Reject Number	Insp. Stamp

Draw Nbr	Revision Nbr
D2273	D
D350-604-041	A
DSI9470	A

100 0.00

DC — DOCUMENT CONTROL

Document Control

Memo 0.00

Photocopy bluefile and create labels per PPP D350-604-041 CHG002

11 07 26 (1)

for BG 11-7-26

110 0.00

Purchasing — PURCHASING

Purchasing

Memo 0.00

Issue P/O: 14400

Description: D350-604-041 Rear locker extender.

Supplier: Delastek.

Certification of Conformity and process sheet from Delastek is required.

4 x 2600-6 Camlock stud - Ship to Delastek B 117628

CL 11/06/30 (1)

Dart Aerospace Ltd

W/O:		WORK ORDER CHANGES					
DATE	STEP	PROCEDURE CHANGE	By	Date	Qty	Approval Chief Eng / Prod Mgr	Approval QC Inspector

Part No: _____ PAR #: _____ Fault Category: _____ NCR: Yes No DQA: _____ Date: _____

Resolution: _____ Disposition: _____ QA: N/C Closed: _____ Date: _____

NCR:		WORK ORDER NON-CONFORMANCE (NCR)						
DATE	STEP	Description of NC Section A	Corrective Action Section B			Verification Section C	Approval Chief Eng	Approval QC Inspector
			Initial Chief Eng	Action Description Chief Eng	Sign & Date			

NOTE: Date & initial all entries

H:\fFORMS\Quality Assurance\approved QA\NCRWO RevE

Work Order ID 71368

Thursday, June 30, 2011 8:17:31 AM

Item ID: D350-604-041 **Accept** **Setup Start**

Revision ID: **Stop**

Item Name: Rear Locker Extender

Start Date: 6/30/2011 **Start Qty:** 1.00 **Cust Item ID:**

Required Date: 7/29/2011 **Req'd Qty:** 1.00 **Customer:**

Reference:

Run Start

Approvals: **Process Plan:** _____ **Date:** _____ **Tooling:** _____ **Date:** _____

Stop

QC: _____ **Date:** _____ **SPC (Y/N):** _____ **Date:** _____

Sequence ID/ Work Center ID	Operation Description	Set Up/ Run Hours	Tool ID	Tool #	Plan Code	Accept Qty	Reject Qty	Reject Number	Insp. Stamp
120 Packaging	Receive & Inspect for Damage & Mat'l Certs	0.00							
Packaging	Packaging								
	Memo	0.00							
Packaging	Ensure a copy of Certification of Conformity and process sheet from Delastek is attached.						11/7/25		(2)
130 QC	QC5- Inspect part completeness to step on W/O	0.00							
Quality Control									
	Memo	0.00							
	Check hole locations to template. DT 8824 Check process sheet and audit.						M.	11	07 26 (7)
140 Packaging	Pick Kit	0.00							
Packaging									
	Memo	0.00							
							11/7/26	SP	

Dart Aerospace Ltd

W/O:		WORK ORDER CHANGES					
DATE	STEP	PROCEDURE CHANGE	By	Date	Qty	Approval Chief Eng / Prod Mgr	Approval QC Inspector

Part No: _____ **PAR #:** _____ **Fault Category:** _____ **NCR:** Yes No **DQA:** _____ **Date:** _____

Resolution: _____ **Disposition:** _____ **QA: N/C Closed:** _____ **Date:** _____

NCR:		WORK ORDER NON-CONFORMANCE (NCR)						
DATE	STEP	Description of NC Section A	Corrective Action Section B			Verification Section C	Approval Chief Eng	Approval QC Inspector
			Initial Chief Eng	Action Description Chief Eng	Sign & Date			

NOTE: Date & initial all entries

Work Order ID 71368

Thursday, June 30, 2011 8:17:31 AM

Item ID: D350-604-041 **Accept** **Setup Start**

Revision ID: **Stop**

Item Name: Rear Locker Extender

Start Date: 6/30/2011 **Start Qty:** 1.00 **Cust Item ID:**

Required Date: 7/29/2011 **Req'd Qty:** 1.00 **Customer:**

Reference:

Run Start

Approvals: **Process Plan:** _____ **Date:** _____ **Tooling:** _____ **Date:** _____

Stop

QC: _____ **Date:** _____ **SPC (Y/N):** _____ **Date:** _____

Sequence ID/ Work Center ID	Operation Description	Set Up/ Run Hours	Tool ID	Tool #	Plan Code	Accept Qty	Reject Qty	Reject Number	Insp. Stamp
150	QC4- 100% Inspect kits for completeness	0.00							
QC	**Memo**	0.00							
Quality Control									
160	Packaging	0.00							
Packaging	**Memo**	0.00							
Packaging	Identify and pack for shipping as per PPP D350-604-041 Location:_____ PPP Rev:_____								
170	QC21- Final Inspection - Work Order Release	0.00							
QC	**Memo**	0.00							
Quality Control									

11/7/2008

11/7/27

11-07-26

Dart Aerospace Ltd

W/O:		WORK ORDER CHANGES					
DATE	STEP	PROCEDURE CHANGE	By	Date	Qty	Approval Chief Eng / Prod Mgr	Approval QC Inspector

Part No: _____ **PAR #:** _____ **Fault Category:** _____ **NCR:** Yes No **DQA:** _____ **Date:** _____

Resolution: _____ **Disposition:** _____ **QA: N/C Closed:** _____ **Date:** _____

NCR:		WORK ORDER NON-CONFORMANCE (NCR)						
DATE	STEP	Description of NC Section A	Corrective Action Section B			Verification Section C	Approval Chief Eng	Approval QC Inspector
			Initial Chief Eng	Action Description Chief Eng	Sign & Date			

NOTE: Date & initial all entries

Picklist Print

Thursday, June 30, 2011 8:17:28 AM

Work Order ID: 71368

Parent Item: D350-604-041

Parent Item Name: Rear Locker Extender

Start Date: 6/30/2011 **Required Date:** 7/29/2011

Start Qty: 1.00 **Required Qty:** 1.00

Comments: IPP Rev:Q□03.12.01□Reformat□KJ/RF□

Component Item ID/ Item Name	Replacement Item ID	Mfg/ Purch	Bin Item	Primary Location	Last Location	Route Seq ID	Unit of Measure	Qty on Hand	Qty per Kit	Total Qty	Qty Issued	Date Issued	Status
2600-6 Camlock Stud		Purchased	No			110	Each	143.0000	4	4			
				Location			**Loc Qty**		**Loc Code**				
				ST357			143						
					117628		143						
D2268 Decal		Manufactured	No			140	Each	14.0000	1	1			
				Location			**Loc Qty**		**Loc Code**				
				ST010			14						
					67420		2						
					69592		12						
D2269 Decal		Manufactured	No			140	Each	11.0000	1	1			
				Location			**Loc Qty**		**Loc Code**				
				ST010			11						
					67421		11						
D350-604-041P Rear Locker Extender		Purchased	No			120	Each	0.0000	1	1			

71368

Dart Aerospace Ltd

W/O:		WORK ORDER CHANGES					
DATE	STEP	PROCEDURE CHANGE	By	Date	Qty	Approval Chief Eng / Prod Mgr	Approval QC Inspector

Part No: _____ **PAR #:** _____ **Fault Category:** _____ **NCR:** Yes No **DQA:** _____ **Date:** _____

Resolution: _____ **Disposition:** _____ **QA: N/C Closed:** _____ **Date:** _____

NCR:		WORK ORDER NON-CONFORMANCE (NCR)						
DATE	STEP	Description of NC Section A	Corrective Action Section B			Verification Section C	Approval Chief Eng	Approval QC Inspector
			Initial Chief Eng	Action Description Chief Eng	Sign & Date			

NOTE: Date & initial all entries

H:\fFORMS\Quality Assurance\approved QA\NCRWO RevE

DESIGN	DRAWN BY	DART AEROSPACE LTD HAWKESBURY, ONTARIO, CANADA	
JB			
CHECKED	APPROVED	DRAWING NO.	REV. D
		D2273	SHEET 1 OF 1
DATE		TITLE	SCALE
02.04.01		350 REAR LOCKER EXTENDER	NTS

B	96.05.27	RE-DRAWN
C	02.01.30	CLARIFY MATERIAL, LAYUP, AND TOOLING
D	02.04.01	REMOVE EPOCAST, ADD SURFACE FINISH

RELEASED 02.04.03

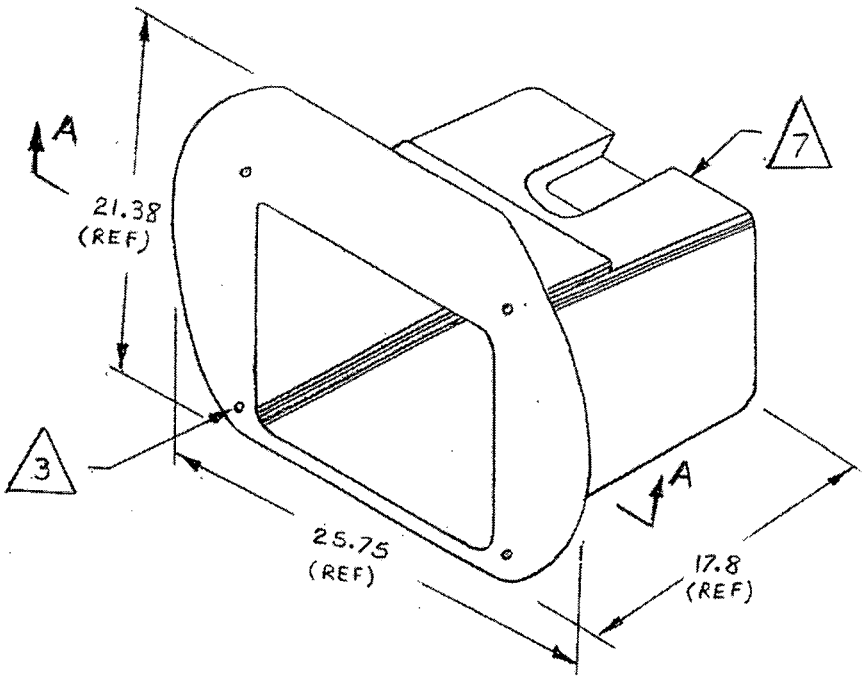

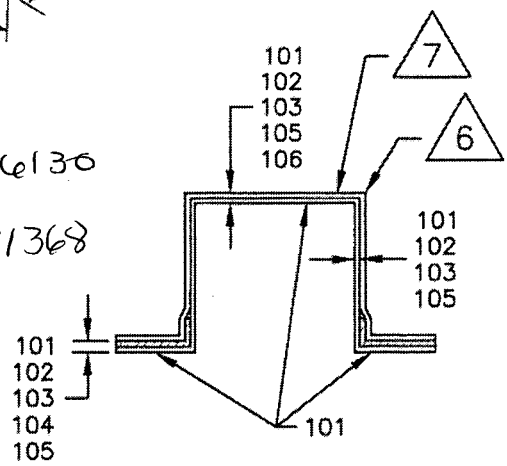

SECTION A–A

NOTES:

1) LAMINATE PER DART QSI 006. LAMINATION SCHEDULE PER THIS DRAWING.
2) LAYUP USING DT8010 MOLD. WET LAYUP NO BAG/VACUUM.
3) TRIM & DRILL PER DT8020. OPEN HOLES TO ø0.257 (4 PLACES).
4) MATERIALS:
   RESIN: DERAKANE 470-36/411/510A40
   FIBRE: 9oz = 9.7 oz 7781 WEAVE "S" GLASS
   18oz = 18.0 oz ROVING "E" GLASS.
5) CONSTRUCTION:
   101–WHITE GLOSS GELCOAT # GEL 944W005.
   102–9oz ALL OVER.
   103–18oz ALL OVER.
   104–18oz RE-INFORCE FRONT FLANGE EXTENDING 2" ON SIDES.
   105–9oz ALL OVER.
   106–PEEL PLY.
6) MATTE TO HOLD DOWN CORNERS AS REQUIRED.
7) FINISH THIS SURFACE WITH DUPONT HIGHBUILD GREY PRIMER 1144–S.
8) ALL DIMENSIONS ARE IN INCHES.

CY11106130

W10:71368

Copyright © 1996 by DART AEROSPACE LTD

THIS DOCUMENT IS PRIVATE AND CONFIDENTIAL AND IS SUPPLIED ON THE EXPRESS CONDITION THAT IT IS NOT TO BE USED FOR ANY PURPOSE OR COPIED OR COMMUNICATED TO ANY OTHER PERSON WITHOUT WRITTEN PERMISSION FROM DART AEROSPACE LTD.

Dart Aerospace Ltd

W/O:		WORK ORDER CHANGES					
DATE	STEP	PROCEDURE CHANGE	By	Date	Qty	Approval Chief Eng / Prod Mgr	Approval QC Inspector

Part No: _____ PAR #: _____ Fault Category: _____ NCR: Yes No DQA: _____ Date: _____

Resolution: _____ Disposition: _____ QA: N/C Closed: _____ Date: _____

NCR:		WORK ORDER NON-CONFORMANCE (NCR)						
DATE	STEP	Description of NC Section A	Corrective Action Section B			Verification Section C	Approval Chief Eng	Approval QC Inspector
			Initial Chief Eng	Action Description Chief Eng	Sign & Date			

NOTE: Date & initial all entries

H:\fFORMS\Quality Assurance\approved QA\NCRWO RevE

DESIGN	DRAWN BY	DART AEROSPACE LTD HAWKESBURY, ONTARIO, CANADA
BW	UP	
CHECKED	APPROVED	DRAWING NO. REV. A
		D350–604–041 SHEET 1 OF 1
DATE		TITLE SCALE
02.04.01		REAR LOCKER EXTENDER ASSEMBLY NTS

A	02.04.01	NEW ISSUE
A1	RF 02.04.23	ADD D2728-1 DECAL + ORIENTATION NOTE

RELEASED 02.04.03

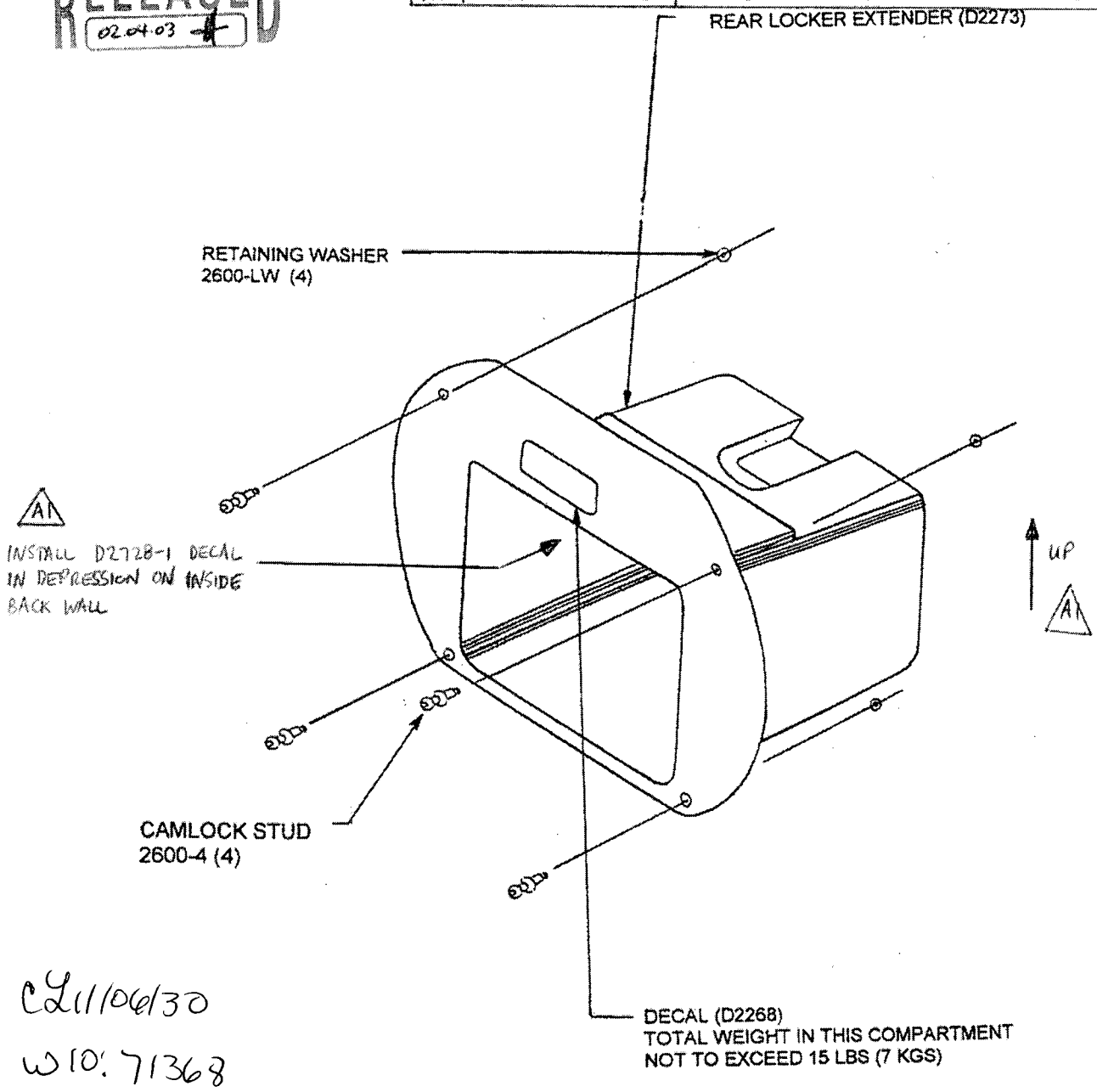

CL11/06/30

W10:71368

D350–604–041 REAR LOCKER EXTENDER

NOTE: DECALS TO BE ORIENTED TO MATCH 'UP' ORIENTATION OF RLE A1

Copyright © 2002 by DART AEROSPACE LTD

THIS DOCUMENT IS PRIVATE AND CONFIDENTIAL AND IS SUPPLIED ON THE EXPRESS CONDITION THAT IT IS NOT TO BE USED FOR ANY PURPOSE OR COPIED OR COMMUNICATED TO ANY OTHER PERSON WITHOUT WRITTEN PERMISSION FROM DART AEROSPACE LTD.

Dart Aerospace Ltd

W/O:		WORK ORDER CHANGES					
DATE	STEP	PROCEDURE CHANGE	By	Date	Qty	Approval Chief Eng / Prod Mgr	Approval QC Inspector

Part No: _____ **PAR #:** _____ **Fault Category:** _____ **NCR:** Yes No **DQA:** _____ **Date:** _____

Resolution: _____ **Disposition:** _____ **QA: N/C Closed:** _____ **Date:** _____

NCR:		WORK ORDER NON-CONFORMANCE (NCR)						
DATE	STEP	Description of NC Section A	Corrective Action Section B			Verification Section C	Approval Chief Eng	Approval QC Inspector
			Initial Chief Eng	Action Description Chief Eng	Sign & Date			

NOTE: Date & initial all entries

H:\fFORMS\Quality Assurance\approved QA\NCRWO RevE

DART SERVICE INSTRUCTION

TO AMEND INSTALLATION INSTRUCTIONS D350-604 REV. B
REF TCCA STC: SH90-4
REF FAA STC: SR00463NY

PURPOSE:
The 2600-4 Camloc Studs may be too short for some installations.

CHANGE:
The qty (4) 2600-4 Camloc Studs are replaced with longer 2600-6 Camloc Studs. It is acceptable to install either 2600-4 or 2600-6 Camloc Studs. The parts list of D350-604 Rev. B is amended as follows:

QTY -041	PART NUMBER	DESCRIPTION
X	D350-604-041	REAR CARGO COMPARTMENT EXTENDER ASS'Y

IS:

4	2600-6	CAMLOC STUD

WAS:

4	2600-4	CAMLOC STUD

CL11/06/30

W10.71368

CANADA
DEPARTMENT OF TRANSPORT
AIRCRAFT CERTIFICATION
BRANCH
DAO # 01-O-01

APPROVED
BY: D. SHEPHERD (DE # 02)
DATE: 09.07.01
CERT. NO.: SH90-4
ISSUE NO.: 3

REV.	DESCRIPTION	BY	DATE
A	NEW ISSUE, NCR 09-046	CP	09.07.01

DESIGN		DART AEROSPACE LTD HAWKESBURY, ONTARIO, CANADA
DRAWN		
CHECKED		DRAWING NO. DSI 9470 — REV. A — SHEET 1 OF 1
MFG. APPR.	N/A	
APPROVED		TITLE: CAMLOC CHANGE — SCALE: NTS
DE APPR.		
DATE	09.07.01	

COPYRIGHT © 2009 BY DART AEROSPACE LTD
THIS DOCUMENT IS PRIVATE AND CONFIDENTIAL AND IS SUPPLIED ON THE EXPRESS CONDITION THAT IT IS NOT TO BE USED FOR ANY PURPOSE OR COPIED OR COMMUNICATED TO ANY OTHER PERSON WITHOUT WRITTEN PERMISSION FROM DART AEROSPACE LTD.

Dart Aerospace Ltd

W/O:		WORK ORDER CHANGES					
DATE	STEP	PROCEDURE CHANGE	By	Date	Qty	Approval Chief Eng / Prod Mgr	Approval QC Inspector

Part No: _____ **PAR #:** _____ **Fault Category:** _____ **NCR:** Yes No **DQA:** _____ **Date:** _____

Resolution: _____ **Disposition:** _____ **QA: N/C Closed:** _____ **Date:** _____

NCR:		WORK ORDER NON-CONFORMANCE (NCR)						
DATE	STEP	Description of NC Section A	Corrective Action Section B			Verification Section C	Approval Chief Eng	Approval QC Inspector
			Initial Chief Eng	Action Description Chief Eng	Sign & Date			

NOTE: Date & initial all entries

H:\fFORMS\Quality Assurance\approved QA\NCRWO RevE

DELASTEK AERONAUTIQUE

Delastek inc.
2699 5e avenue
Local 14, Porte -A-
Grand-Mère, Québec G9T 5K7
Can ** Fax (819) 533-3494 **

PACKING SLIP
CERTIFICATE OF COMPLIANCE

Invoice #	39532
Customer #	DART US

Telephone: (819) 533-5788
Warehouse: MAIN

Bill to:	Ship to:
DART AEROSPACE LTD 1270, Aberdeen Street Hawksbury, Ontario K6A 1K7 Canada	DART AEROSPACE LTD 1270, Aberdeen Street Hawksbury, Ontario K6A 1K7 Canada

Telephone: 613-632-5200
Contact: Linda Lacelle

Ship via	F.O.B.	Terms	Salesperson
FEDEX P1 Collect	Origin	Net 30 days USA	Claude Lessard, ext. 233

Ship date	Order Date	Our PO #	Order by	Your PO #	GST/PST #
22/07/2011	30/06/2011	18061	Chantal Lavoie	14400	

Order Qty	B.O. Qty	Current Ship.	Item #	Item Description
1	0	1	DKC134-0003	Line #2 Rear Locker Extender D350-604-041P B71368 U de M : Each Référence DKA362-0004 DWG: D350-604-041 REV. A1 D2273 REV. D No. série: B71368 No. lot: 33656

It is hereby certified that all materials, process and finished items were controlled and tested in accordance with the requirements of the purchase order and applicable specifications. All such records are on file at our plant and available for review upon request.

Accepted by: Quality department

DELASTEK QA-6 AQ-357

☐ Cust. ☐ Adm. ☐ Quality ☐ Ship.

Date: Jeudi, 2011-06-02 12:39:17
Utilisateur: Pascal Carignan

Feuille de Procédé

Client	: DART US DART AEROSPACE LTD	**Nom Dessin**	: REAR LOCKER EXTENDER
Numéro Job	: 33656	**Numéro Article**	: DKC134-0003
Numéro Soumission	: 3482	**Numéro Dessin**	: D350-604-041 & D2273
Numéro B.A.	:	**Projet Numéro**	: DK-362
Cette fois	: 2011-06-02 **No. B.V.** :	**Révision dessin**	: A & D
Prsht Rev.	: NC	**Matériel**	: Derakane 470-36/411/510
Prem. fois	: **Type** :	**Date Dûe**	: 2011-06-09 **Qté:** 1 **UdM:** UNITE
Job précédente	: 33655		

Écrit par : _____

Vérifié & Approuvé par : _____

Commentaires : N° de pièce Laminée Dart Aerospace: D2273
N° de pièce Assemblage Dart Aerospace: D350-604-041

Process Sheet Rév.: 03 Modifier la séq. 6 Prep-general.

B 71368

Produit additionnel

Numéro Job:

# Séq.:	Machine ou Opération:	Description :
1.0	PRÉPARATION	Préparation du moule

Commentair Setup: 0.00Hrs/ Run: 15.0000Min Total Run : 0.2500Hrs

Faire la préparation du moule DKO-0250 selon IG 0009.

Date:_____ Sceau:_____

2.0	AMB0350	Gel Coat Blanc N° Gel 944W005

Commentair Qty.: 1.580 UNITE(s)/Unit Total : 1.580 UNITE(s)
Gel Coat Blanc N° Gel 944W005 N° de Lot: 1-31135-1

3.0	AMB0286	Catalyst N° DDM-9

Commentair Qty.: 0.0070 GALLON(s)/Unit Total : 0.0070 GALLON(s)
Catalyst N° DDM-9 N° de Lot: 1-27829-1

4.0	AC0747	Acetone

Commentair Qty.: 0.200 KILOGRAMME(s)/Unit Total : 0.200 KILOGRAMME(s)

5.0	PREP-GENERAL	Préparation du matériel

Commentair Setup: 0.00Hrs/ Run: 45.0000Min Total Run : 0.7500Hrs

Tailler le matériel selon les dimensions requises à l'aide de gabarit de trimage prévus à cet effet.

Date: 02 Juin 11 Sceau:

Form: rprocess

Date: Jeudi, 2011-06-02 12:39:17
Utilisateur: Pascal Carignan

Feuille de Procédé

Client: DART US DART AEROSPACE LTD
Numéro Job: 33656

Nom Dessin: REAR LOCKER EXTENDER
Numéro Article: DKC134-0003

Numéro Job:

# Séq.:	Machine ou Opération:	Description :
6.0	PREP-GENERAL	Préparation du matériel

Commentair Setup: 0.00Hrs/ Run: 30.0000Min Total Run : 0.5000Hrs

Faire la préparation du Gel coat selon IF134-0003 .

Date: 11/07/11 Sceau: DELASTEK COMPOSITES 65

7.0	GEL COAT	Application du Gel Coat

Commentair Setup: 0.00Hrs/ Run: 20.0000Min Total Run : 0.3333Hrs

Appliquer le gel coat selon IF 134-0003(réf. IG0019).

Note: Le gel coat ne doit contenir aucun "airdry" ni aucune cire. Et le temp de séchage est important afin d'éviter d'avoir des défauts de surface, et afin d'éviter que le tissu ne vienne marquer au travers du Gel Coat ainsi que d'éviter d'avoir un rétrécissement.

Quantité: 1 Date: 11/07/11 Sceau: DELASTEK COMPOSITES 65

8.0	AMB0212	Résine (411B7530) 411-350 promo. 75min.

Commentair Qty.: 1.680 LITRE(s)/Unit Total : 1.680 LITRE(s)
Résine (411B7530) 411-350 promo. 75min N° de Lot: 1-31288-1

9.0	AMB0286	Catalyst N° DDM-9

Commentair Qty.: 0.0070 GALLON(s)/Unit Total : 0.0070 GALLON(s)
Catalyst N° DDM-9 N° de Lot: 1-2829-1

10.0	AMB0214	9.7 oz Weave "S" glass #FG-778150-125Y Volan Finish

Commentair Qty.: 4.6 VERGE(s)/Unit Total : 4.6 VERGE(s)
9.7 oz Weave "S" glass #FG-778150-125Y Volan Finish N° de Lot: 1-31000-2

11.0	AMB0213	WR1850 Roving 18oz. x 50"

Commentair Qty.: 1.140 KILOGRAMME(s)/Unit Total : 1.140 KILOGRAMME(s)
WR1850 Roving 18oz. x 50" N° de Lot: 1-28778-1

12.0	LAMINAGE	Faire le laminage

Commentair Setup: 0.00Hrs/ Run: 3.5000Hrs Total Run : 3.5000Hrs

Selon IF 134-0003. S'assurer de ne pas trapper d'air entre les rangs.

Inscrire les informations suivantes:

Humidité: 50% Température: 77.4°F Heure: 9:00

Quantité: 1 Date: 12/07/11 Sceau: DELASTEK COMPOSITES 65 DELASTEK 48

Form: rprocess

Date: Jeudi, 2011-06-02 12:39:17
Utilisateur: Pascal Carignan

Feuille de Procédé

Client: DART US DART AEROSPACE LTD
Numéro Job: 33656
Nom Dessin: REAR LOCKER EXTENDER
Numéro Article: DKC134-0003

Numéro Job:

# Séq.:	Machine ou Opération:	Description :
13.0	AMB0212	Résine (411B7530) 411-350 promo. 75min.

Commentair Qty.: 0.150 LITRE(s)/Unit Total : 0.150 LITRE(s)
Résine (411B7530) 411-350 promo. 75min N° de Lot:

14.0	AMB0286	Catalyst N° DDM-9

Commentair Qty.: 0.0070 GALLON(s)/Unit Total : 0.0070 GALLON(s)
Catalyst N° DDM-9 N° de Lot:

15.0	FINITION	Finition Générale

Commentair Setup: 0.00Hrs/ Run: 30.0000Min Total Run : 0.5000Hrs

Injecter les bulles d'air selon IF134-0003 si applicable.

Quantité: Date: Sceau:

16.0	DÉMOULAGE	Démoulage de la pièce

Commentair Setup: 0.00Hrs/ Run: 10.0000Min Total Run : 0.1667Hrs

Faire le démoulage de la pièce selon IF134-0003 en poussant de l'air à l'intérieur tout en faisant bien attention de ne pas l'endommager .

Quantité: 1 Date: 18/07/11 Sceau: DELASTEK COMPOSITES 65

17.0	TRIMAGE	Trimage

Commentair Setup: 0.00Hrs/ Run: 40.0000Min Total Run : 0.6667Hrs

Selon IF 134-0002.

Faire le sablage si nécessaire.

Quantité: 1 Date: 21/07/11 Sceau: DELASTEK 48

18.0	AAC1021	Dupont Primer N° 7704S

Commentair Qty.: 0.3400 UNITE(s)/Unit Total : 0.3400 UNITE(s)
Dupont Primer N° 7704S N° de Lot: 1-30270-1

19.0	AAC1101	N° 7775S, Dupont Activator - Reducer Chromabase

Commentair Qty.: 0.0670 UNITE(s)/Unit Total : 0.0670 UNITE(s)
N° 7775S, Dupont Activator - Reducer Chromabase N° de Lot: 1-29932-3

Form: rprocess

Date: Jeudi, 2011-06-02 12:39:17
Utilisateur: Pascal Carignan

Feuille de Procédé

Client: DART US DART AEROSPACE LTD
Numéro Job: 33656

Nom Dessin: REAR LOCKER EXTENDER
Numéro Article: DKC134-0003

Numéro Job:

# Séq.:	Machine ou Opération:	Description :
20.0	PRIMER	Application primer

Commentair Setup: 0.00Hrs/ Run: 15.0000Min Total Run : 0.2500Hrs

Appliquer le primer selon IG 0008.

Quantité: 1 Date: 21/07/11 Sceau: Q N° fiche de Mélange: N/A

21.0	~~AAC1607~~ AAC 1647	Camlock Stud 2600-~~4~~ 6 (or Monadnock 1126000-4)

DELASTEK R&D 18 2011-07-12

Commentair Qty.: 4 UNITE(s)/Unit Total : 4 UNITE(s)
Camlock Stud 2600-~~4~~ 6 (or Monadnock 1126000-4) N° de Lot: 1-30688-1

22.0	AAC0682	Washer 2600-LW (1127700)

Commentair Qty.: 4 UNITE(s)/Unit Total : 4 UNITE(s)
Washer 2600-LW (1127700) N° de Lot: 1-6687-1

23.0	ASSEMBLAGE	Assemblage mécanique

Commentair Setup: 0.00Hrs/ Run: 15.0000Min Total Run : 0.2500Hrs

Faire l'assemblage selon IF134-0004.

Démasquer la pièce.

Assembler les "Studs" selon IG 0037.

Quantité: 1 Date: 22/07/11 Sceau: DELASTEK COMPOSITES 65 DELASTEK COMPOSITES 7

24.0	IDENTIFICATION	Identification à encre indéllibile

Commentair Setup: 0.00Hrs/ Run: 10.0000Min Total Run : 0.1667Hrs

Faire l'identification de la pièce selon IF134-0005 .

N° de pièce Cleint: D350-604-041
N° de Job: 33656
N° de Fabrication: 22/07/11

DELASTEK 27

Quantité: 1 Date: 22/07/11 Sceau:

25.0	INSPEC FINAL	Inspection finale

Commentair Setup: 0.00Hrs/ Run: 10.0000Min Total Run : 0.1667Hrs

Faire l'inspection dimensionnelle et visuelle de la pièce selon le dessin.

Form: rprocess

Date: Jeudi, 2011-06-02 12:39:17
Utilisateur: Pascal Carignan

Feuille de Procédé

Client: DARTJS DART AEROSPACE LTD
Numéro Job: 33656

Nom Dessin: REAR LOCKER EXTENDER
Numéro Article: DKC134-0003

Numéro Job:

# Séq.:	Machine ou Opération:	Description :
	Quantité: 1 Date: 22 JUIL. 11 Sceau: DELASTEK QA-6	
26.0	EMBALLAGE	Emballage & Entreposage

Commentair Setup: 0.00Hrs/ Run: 10.0000Min Total Run : 0.1667Hrs

Faire l'emballage selon IG 0057.

Quantité: 1 Date: 22 Juil 11 Sceau: DELASTEK 53

JOB 33656
fait 22 JUIL 2011

Form: rprocess